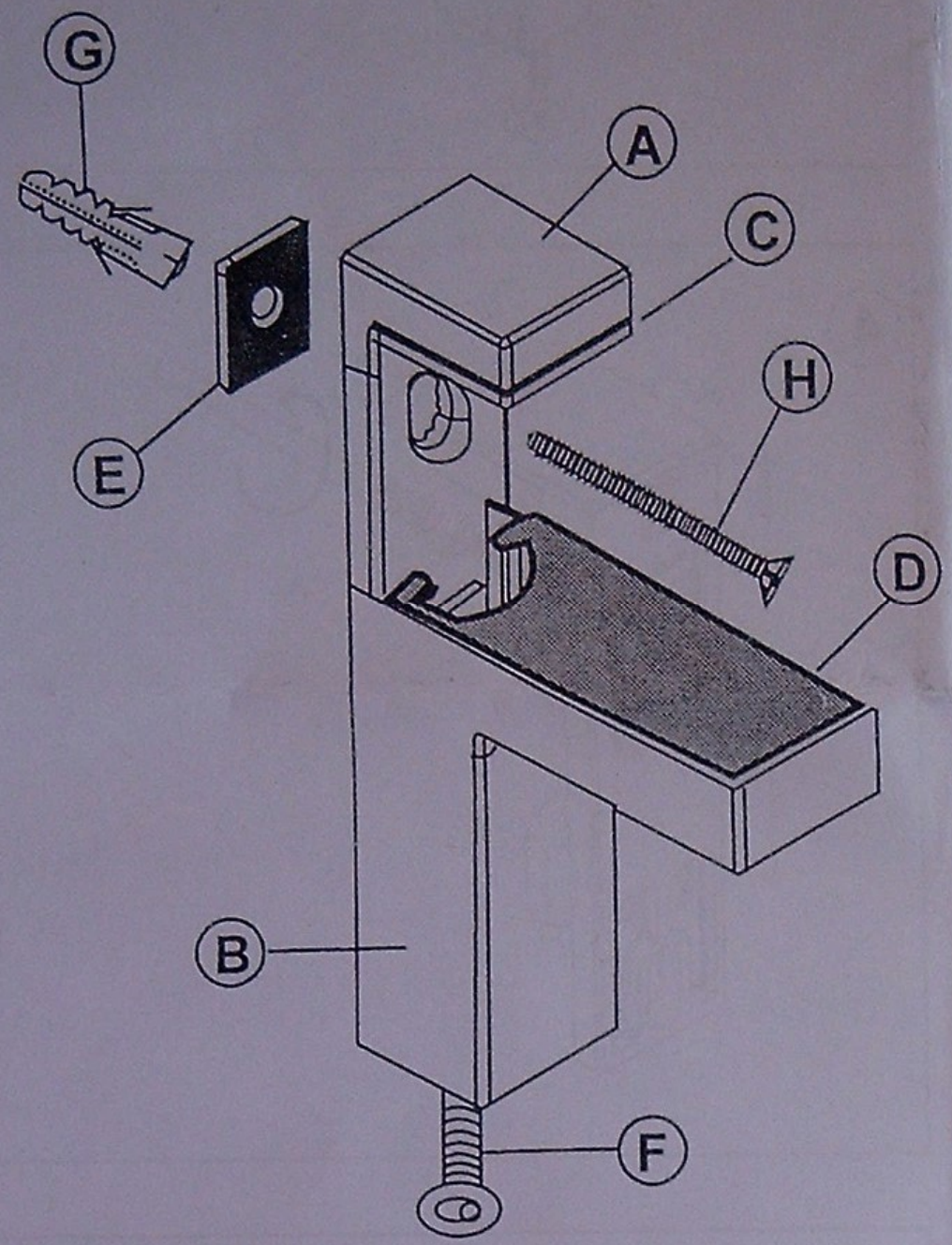
G
A
C
H
E
D
B
F

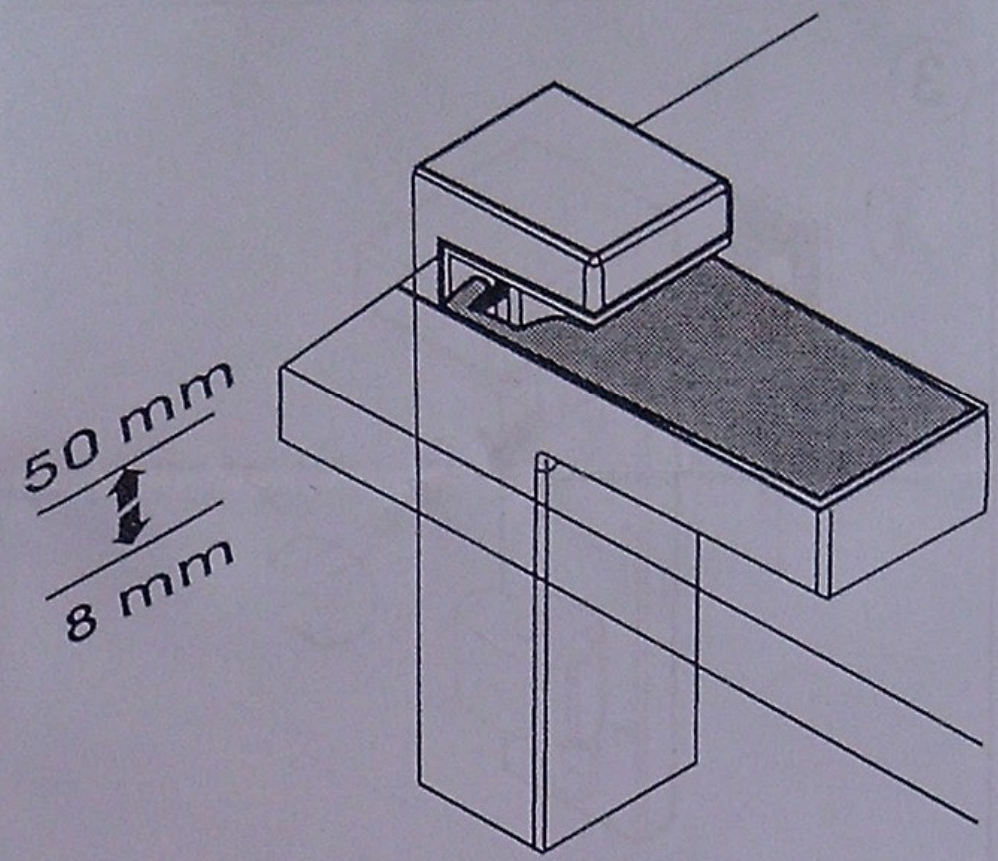
50 mm
8 mm